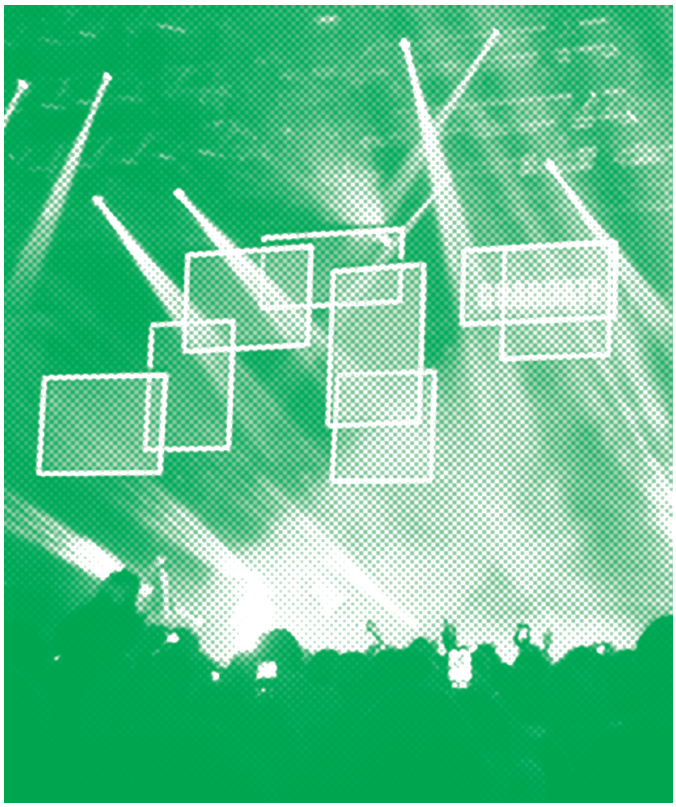

DYNAMIC STACK TRACKS 40

The system consists of a 40 stacking truss provided with a single track and a foldable dolly.
It is also available with a single track without a dolly. The system, which is modular and very easy to assemble, features a motorised and a slave trolley. It is made in dark grey to absorb light, but other colours are available on request.

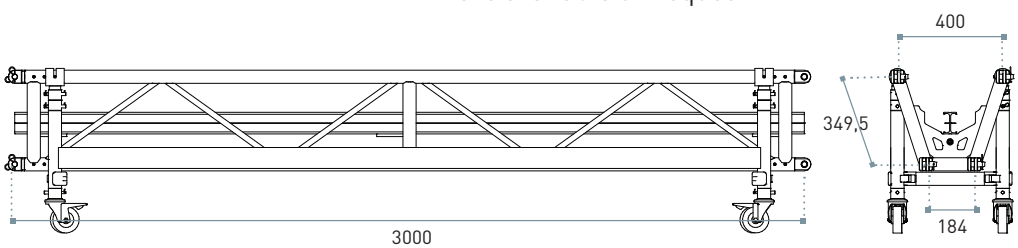

LOAD TABLE / FORK CONNECTION

SPAN m	UNIF. DISTRIBUTED LOAD (q) point load kg/m	full load kg	central deflection mm	CENTRE POINT LOAD (F) point load kg	full load kg	central deflection mm	THIRD POINT LOAD (F F) point load kg	full load kg	central deflection mm	QUARTER POINT LOAD (F F F) point load kg	full load kg	central deflection mm	FIFTH POINT LOAD (F F F F) point load kg	full load kg	central deflection mm
3	555	1160	2	1660	1660	3	832	1660	2	555	1660	2	416	1660	2
6	271	1630	14	1150	1150	16	814	1630	19	543	1630	17	407	1630	17
9	165	1480	44	740	740	35	560	1120	45	370	1110	42	309	1240	44
12	87	1050	77	524	524	64	399	797	80	262	786	74	220	878	78
15	52	775	121	387	387	101	298	595	126	194	581	116	163	651	123
18	32	580	174	290	290	149	226	453	182	145	435	168	123	491	177
21	21	431	237	216	216	207	172	344	250	108	323	230	92	368	242
24	13	311	310	155	155	277	128	256	330	78	233	302	67	268	317

CANTILEVER LOAD TABLE / FORK CONNECTION

SPAN	UNIFORMLY DISTRIBUTED LOAD (q)			CENTRE POINT LOAD (F)	
m	q am.- kg/m	q am.- kg	defl.- mm	F am. - kg	defl.- mm
3	179	537	6	288	8
6	39	236	3	122	31

The data listed in the above charts refer to the structural characteristics of the truss without the rail system modules.

Load table has been prepared in accordance with UNI ENV 1999-1-1 (Eurocode 9). When calculating the allowable loads it is assumed that the load is suspended from the bottom chord and the truss is supported from the top chord at each end.

The values shown in the table are the allowable static loads that can be applied to the truss. This is the live load or the payload. The self weight of the truss has been taken into account when calculating the values in the table.

It should be noted that this are idealised loading conditions and the User shall re-analyze the truss for the loading conditions which prevail for the application being considered.

DST40 MAIN CHARACTERISTICS

stackable

may be brought on the stage with their dolly, which folds upward without the need of being stored when the truss works

easily assembled with the trolley which can be mounted even before rigging activities

use of a few accessories that can be set up also on curved tracks

all trolleys can run on straight and curved tracks.

They can be used in various applications to move, open and rotate LED screens, scenery and projectable panels, such as like concerts and other events in general.

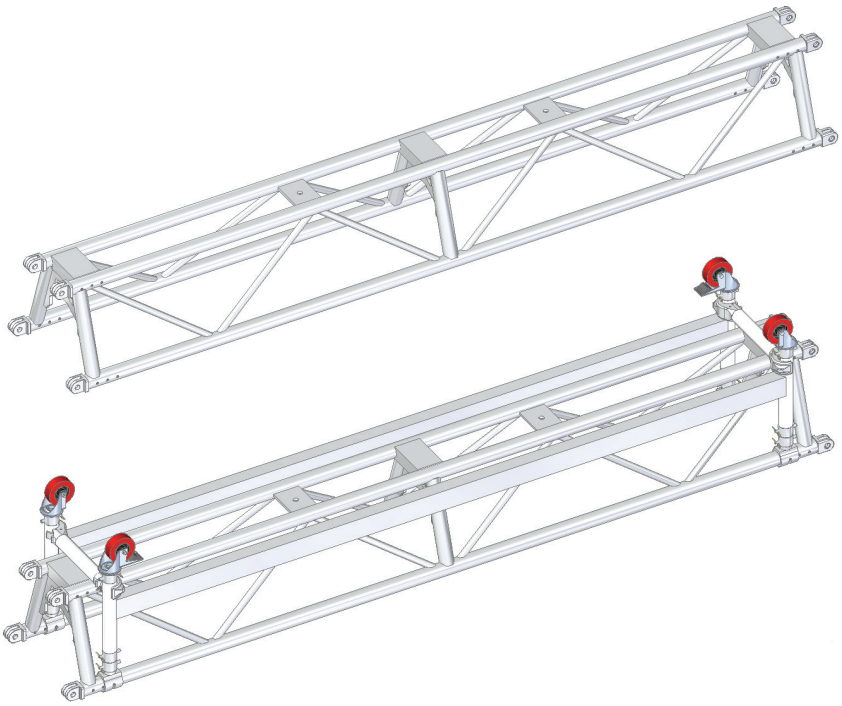

DST 40 / MODULES
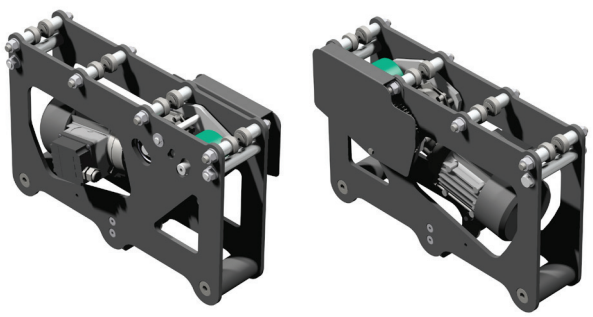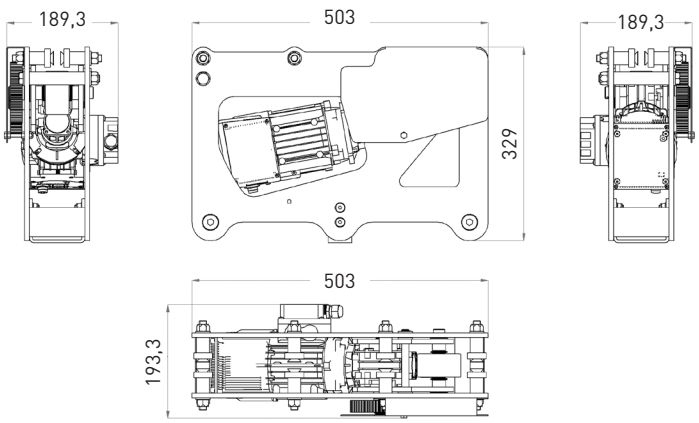
Motorised Trolley
Load capacity: 200 kg
Motor: 0.25kW, 400V - 1350 rev/min
Silent wheels
Variable speed